GENERAL DESCRIPTION

The Spangle series DIN rail power supply is our enhanced standard, industrial-grade power supplies that focus on the essential features needed in today's industrial and windmill applications. The excellent cost/performance ratio presents many new and exciting opportunities without compromising quality or reliability. These power supplies offer high stability and strong anti-interference capabilities for industrial control, windmill equipment, machinery, and various industrial devices used in harsh environments. Additional to low loss at low input range makes it more suitable for full range of country applications.

The built in PFC and LLC circuit inside the power supply help to improve the power factor of the AC power supply, reducing the negative impact on the network and the power plant, as well as improving the energy efficiency of the equipment.

The mechanically robust housing is made of a high-grade, reinforced molded material, which permits the units to be used in surrounding temperatures up to 70°C. The power supply is compact in size, lightweight, and designed for standard DIN rail installation and saving space for customers. The high efficiency makes it energy saving and reduces the heat loss to the environment specially at low voltage input. The simple clear front panel makes wiring and installation easier for any application environment.

There are four versions: WAT-0001-31 (Standard), WAT-0301-31 (PCB with conformal coating)
WAT-0001-41 (Basic), WAT-0301-41 (Basic + PCB with conformal coating)

*Conformal coating can resist dust, corrosive, use in high humidity and salt spray area.

*Basic version without I<In and DC OK signal.

Features and Application:

- **Input Voltage: 85 - 277VAC / 120 - 390VDC**
- **Operation Temperature: –40 °C to 70 °C**
- **Design for [EN 62477, UL61010] Safety Standard**
- **Slim design with metal chassis**
- **OCP, OVP, OTP, Short Circuit Protection**
- **Advance signal pins I<In and DC OK (WAT-0001-31, WAT-0301-31)**
- **Conformal coating on PCBAs for protection (WAT-0301-31, WAT-0301-41)**
- **Ordering number: WAT-0001-31 / WAT-0301-31 / WAT-0001-41 / WAT-0301-41**

All figures show WAT-0001-31, and WAT-0301-31 only.
WAT-0001-41, WAT-0301-41 without DC OK, I<In signals and Boost LED.

INTENDED USE

This device is designed for installation in an enclosure and is intended for commercial and industrial use. Such as in industrial control, process control, monitoring, measurement, Audio/Video, information or communication equipment or the like.

Do not use this device in equipment where malfunction may cause severe personal injury or threaten human life.

If this device is used in a manner outside of its specification, the protection provided by the device may be impaired.

Without additional measures to reduce the harmonic input current (PFC), the power supply is not suited to be connected to the public mains system in residential, commercial and light-industrial environments. No additional measures are necessary for use in industrial environments. Exceptions for various countries outside the European Union exist and can be determined locally.

Do not use this device on AC mains with more than 24A load when the application is sensitive to short output voltage dips during mains interruptions even with a length shorter than 20ms.

INSTALLATION INSTRUCTIONS

WARNING

Risk of electrical shock, fire, personal injury or death.

- Turn power off before working on the device and protect against inadvertent re-powering.
- Do not open, modify or repair the device.
- Use caution to prevent any foreign objects from entering the housing.
- Do not use it in wet locations or in areas where moisture or condensation can be expected.
- Do not touch during power-on, and immediately after power-off. Hot surfaces may cause burns.

Obey the following installation instructions:

This device may only be installed and put into operation by qualified personnel.

This device does not contain serviceable parts. The tripping of an internal fuse is caused by an internal defect.

If damage or malfunction occurs during installation or operation, immediately turn power off and send the unit to the factory for inspection.

Install device in an enclosure providing protection against electrical, mechanical and fire hazards. Install the device onto a DIN-rail according to EN 60715 with the input terminals on the bottom of the device.

The device is designed for pollution degree 2 in controlled environments. No condensation or frost is allowed.

The enclosure of the device provides a degree of protection for IP20. The enclosure does not provide protection against spilled liquids.

The isolation of the device is designed to withstand impulse voltages of overvoltage category III according to IEC 60664-1.

The device is designed as “Class of Protection” I equipment according to IEC 61140. Do not use it without a proper PE (Protective Earth) connection.

The device is suitable to be supplied from TN, TT or IT mains networks. The continuous voltage between the input terminal and the PE potential must not exceed 300Vac.

A disconnecting means shall be provided for the input of the device.

The device is designed for convection cooling and does not require an external fan. Do not obstruct airflow and do not cover ventilation grid!
The device is designed for altitudes up to 5000m (16400ft). Above 2000m (6560ft) the overvoltage category is reduced to level II and a reduction in output current is required.

Keep the following minimum installation clearances: 40mm on top, 20mm on the bottom, 5mm left and right side. Increase the 5mm to 15mm in case the adjacent device is a heat source. When the device is permanently loaded with less than 50%, the 5mm can be reduced to zero.

The maximum surrounding air temperature is +70°C (+158°F). The operational temperature is the same as the ambient or surrounding air temperature and is defined 2cm below the device.
The device is designed to operate in areas between 5% and 90% relative humidity.

TERMINOLOGY AND ABREVIATIONS

PE and ⏚ symbol	PE is the abbreviation for Protective Earth and has the same meaning as the symbol
Earth, Ground	This document uses the term “earth” which is the same as the U.S. term “ground”.
T.B.D.	To be defined, value or description will follow later.
AC 230V	A figure displayed with the AC or DC before the value represents a nominal voltage with standard tolerances included. e.g.: DC 12V describes a 12V battery disregarding whether it is full (13.7V) or flat (10V)
230Vac	A figure with the unit (Vac) at the end is a momentary figure without any additional tolerances included
50Hz vs. 60Hz	As long as not otherwise stated, AC 230V parameters are valid at 50Hz mains frequency.
may	A key word indicating flexibility of choice with no implied preference
shall	A key word indicating a mandatory requirement
should	A key word indicating flexibility of choice with a strongly preferred implementation.

TECHNICAL DATA

		I<In and DC OK signals	PCB with conformal coating
Model Number	WAT-0001-31	Yes	-
	WAT-0001-41	-	-
	WAT-0301-31	Yes	Yes
	WAT-0301-41	-	Yes

Input Ratings

Nominal Input Voltage	100-240 Vac	
Input Voltage Range	85-277 Vac	
Input Under-voltage	305 Vac ; Lasts for 2h without damage	
Input Voltage Frequency	Nominal Input Frequency	50-60 Hz
	Input Frequency Range	47-63 Hz
Input Current	100 Vac	5.5A
	240V ac	2.5A
DC Input Voltage Range*1	120-390Vdc	
Efficiency at 100% Load	100 Vac	90% typ.
	240V ac	94% typ.
Turn-on Voltage	70-85VAC	
Shut-down voltage	60-70VAC	
Max Inrush Current (Cold Start)	100 Vac	25 A typ.
	240V ac	25 A typ.
Power Factor at 100% Load	100 Vac	> 0.99
	240V ac	> 0.98

*1 Power Supply can operate at DC Input voltage, please connect +pole to L, -pole to N and PE terminal to an earth wire or to the machine ground.

Output Ratings

Nominal Output Voltage	24 Vdc
Factory Set Point Tolerance	24 Vdc ± 1%
Output Voltage Adjustment Range	24-28 Vdc (>24V constant capacity restricted)
Output Current	0-20.0 A
Output Power	480 W max
Line Regulation	± 0.5%
Load Regulation	± 1.0%
Ripple and Noise*3(20MHz)	< 100 mVpp
Rise Time	25 ms typ.
Start-up Time	< 1s
Hold-up Time	> 22 ms
Dynamic power	150% Io working 3s (min), the off time adapts with different load conditions, long-term protection, self-recover
Static power	125%Io, work for a long time at room temperature.
Capacitive Loads	20,000 µF Max
DC OK Signal	Resistive load 20-28.5VDC/10mA
13/14 Relay Contact	Resistive load 30VDC/1A Max

*2 For power will be de-rating from 60°C to 70°C, and Vin < 100 Vac, see Engineering Data power de-rating information.

*3 Ripple is measured with an AC coupling mode, 5cm wires, and in parallel to end terminal with 0.1 µF ceramic capacitor & 47 µF electrolytic capacitor.

Functions

DC OK Relay Contacts and LED Indicator Characteristics

	Normal Operation I<In	Power Boost *4 I>In	Overload Operation U < 0.9 x Un	Output Short Circuit	Over Temperature
LED "DC OK" (Green)	On	On	Blink	Blink	Off
LED "BOOST" (Yellow) *4	Off	On	On	Off	Off
Signal "DC OK" *4	On	On	Off	Off	Off
Relay contacts "13_14"	Closed	Closed	Opened	Opened	Opened
Signal "I<In" *4	On	Off	Off	Off	Off

*4 For WAT-0001-31 and WAT-0301-31 only

EMC*6

Emissions	CE	EN/BS EN 55032, Class B EN/BS EN 61000-6-4	
	RE	EN/BS EN 61000-6-3: Class B	
	Harmonic Current Emission	IEC/EN/BS EN 61000-3-2, Class A	
	Voltage Fluctuation and Flicker	IEC/EN/BS EN 61000-3-3	
Immunity	Electrostatic Discharge	Contact Discharge: 8 kV Air Discharge: 15 kV	IEC 61000 4-2 Level 4 Criteria A[1)]
	Radiated Field	80 MHz - 1 GHz, 10 V/M, 80% Modulation (1 kHz) 1.4 GHz - 6 GHz, 10 V/M, 80% Modulation (1 kHz)	IEC 61000 4-3 Level 3 Criteria A[1)]
	Electrical Fast Transient / Burst	Input: ±4KV	IEC 61000 4-4 Level 4 Criteria A[1)]
	Surge	L-N±2KV，L/N-PE±4KV	IEC 61000 4-5 Level 4 Criteria A[1)]
	Conducted	150 kHz - 80 MHz, 10Vrms	IEC 61000 4-6 Level 3 Criteria A[1)]
	Power Frequency Magnetic Fields	30 A/m	IEC 61000 4-8 Level 4 Criteria A[1)]
	Voltage Dips and Interruptions	0% residual; 1 cycle, Criteria A[1)] 70% residual; 25 cycles, Criteria A[1)] 0% residual; 250 cycles, Criteria C[3)]	IEC 61000 4-11

[1)] Criteria A: Normal performance within the specification limits

[2)] Criteria B: Temporary degradation or loss of function which is self-recoverable

[3)] Criteria C: Output out of regulation, shuts down during test (Need to recycle AC power cord to normal operation after test)

[4)] Asymmetrical: Common mode (Line to earth)

[5)] Symmetrical: Differential mode (Line to line)

*6 Power supply is considered a component in the end-user's system. Please contact our local sales to get more information about the power supply EMC test setup.

Protection

Over-voltage Protection		<32VDC; Hiccup Mode; (Auto-Recovery when the fault is removed)
Overload / Overcurrent		105 - 150% of rated load current, Auto-recovery
Over Temperature		Latch Mode; (Auto-Recovery when the fault is removed)
Short Circuit		Hiccup Mode; (Auto-Recovery when the fault is removed)
Internal Fuse at L pin		T 6.3 A / 250 V
Protection Against Shock		Class I with PE*5 connection

*5 PE: Primary Earth

Environment

Surrounding Temperature	Operating	-40°C to +70°C
	Storage	-40°C to +85°C
Operating Humidity	20-90% RH (Non-Condensing)	
Operating Altitude	0 to 5,000 Meters	
Shock Test	Non-Operating	IEC 62268-2-27 Half Sine Wave
Vibration	Operation	EC 60068-2-6 IEC 60068-2-53 IEC 60068-2-64 IEC 60255-21-1 item 3.2.1 IEC60255-21-2 item 4.2/4.3
Protect common dust and pollutants	Yes, WAT-0301-31, WAT-0301-41 only	
Degree of protection	IP20	

Reliability Data

MTBF	I/P: 115 Vac & 230 Vac, O/P: 100% load, Ta: 25°C	> 700,000 hrs

Safety Standards / Directives

Electrical Safety	CE-LVD / UKCA	EN 62477-1/BS EN 62477-1	
	UL/cUL	UL 61010-1/-2-201， UL 62368-1	
CE		In conformance with EMC Directive 2014/30/EU and Low Voltage Directive 2014/35/EU	
UKCA		In conformance with Electrical Equipment (Safety) Regulations 2016 and Electromagnetic Compatibility Regulations 2016	
Leakage Current		100VAC: < 1.5 mA. 240VAC: < 1.5 mA.	
Galvanic Isolation	Input to Output	4.0 kVac	
	Input to PE	2.5 kVac	
	Output to PE	0.5 kVac	
Insulation Resistance	Input to Output	Environment temperature: 25±5°C Relative humidity: ＜95%, non-condensing Test voltage: 500VDC	> 500 MΩ
	Input to PE		
	Output to PE		
Power Derating	Temperature	-40°C~ -30°C de-rate power by 2 % / °C > 60°C de-rate power by 2.5 % / °C	
	Input Voltage	< 140Vdc de-rate power by 1% / Vdc < 100Vac de-rate power by 1% / Vac	

Mechanical

Case Cover / Chassis	Metal	
Dimensions (H x W x D)	124 x 55 x 127 mm (4.88 x 2.16 x 5.0 inch)	
Unit Weight	0.75 kg (1.65 lb)	
Indicator	Green LED	DC OK
Cooling System	Free air Convection	
Wire	Input	AWG 16-12 (Current rating can refer to “AWG Wire Table”)
	Output	AWG 16-12 (Current rating can refer to “AWG Wire Table”)
	DC OK	AWG 24-16 (Current rating can refer to “AWG Wire Table”)
Mounting Rail	Standard TS35 DIN Rail in accordance with EN 60715	
Noise (1 Meter from power supply)	Sound Pressure Level (SPL) < 25 dBA	

FUNCTIONAL DIAGRAM

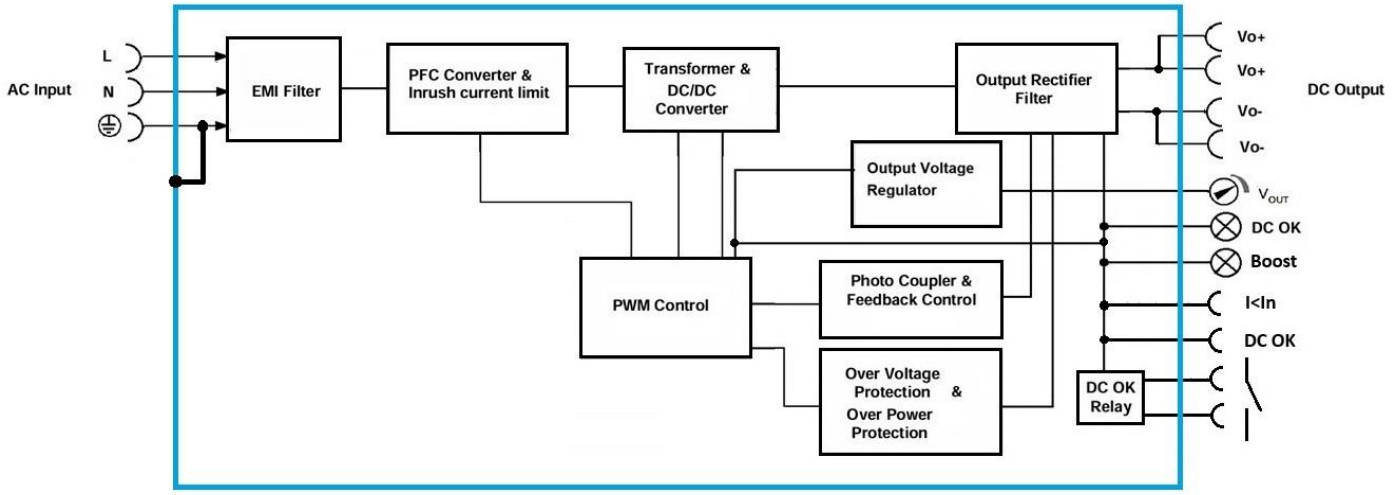

WAT-0001-31 / WAT-0301-31

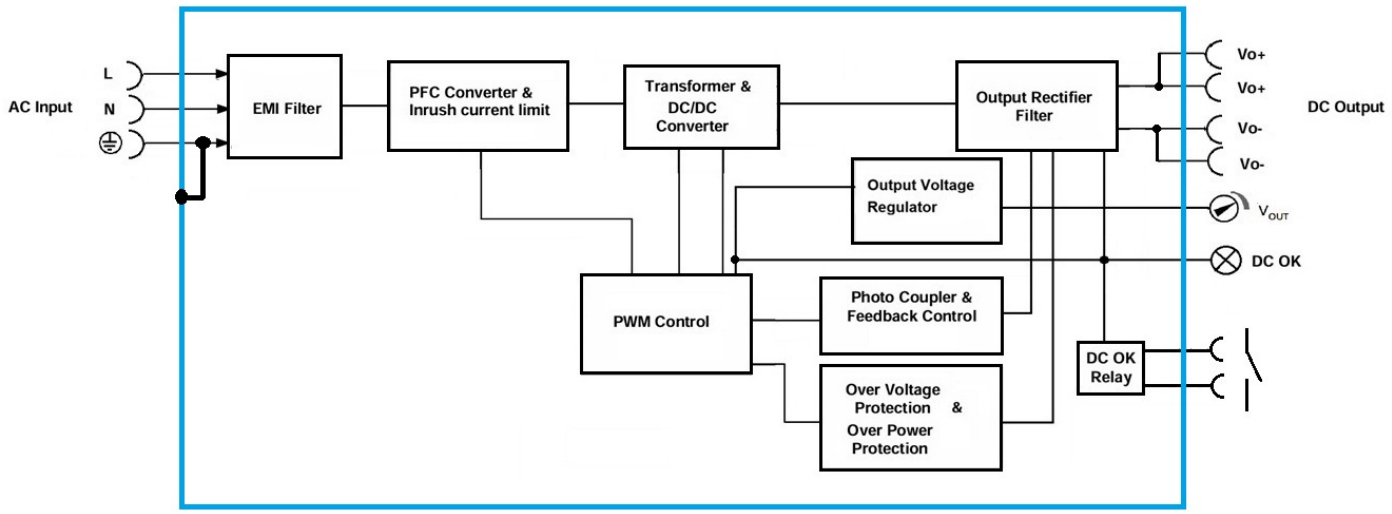

WAT-0001-41 / WAT-0301-41

WITHSTAND VOLTAGE TEST

The screw at the side mark of the casing is the connection of the built-in gas discharge tube to PE where protects the power supply from asymmetric interference (e.g. EN 61000-4-5).

Please follow the steps below to perform the high withstand voltage test.

1. Disconnect the power supply from mains.
2. Completely unscrew the screw at the side mark , keeping the screw in a safe position.
3. Perform a continuous withstand voltage test on the power supply.
4. After successfully completing the withstand voltage test, fully screw back the disconnected screw back to the power supply.

FRONT SIDE AND USER ELEMENTS

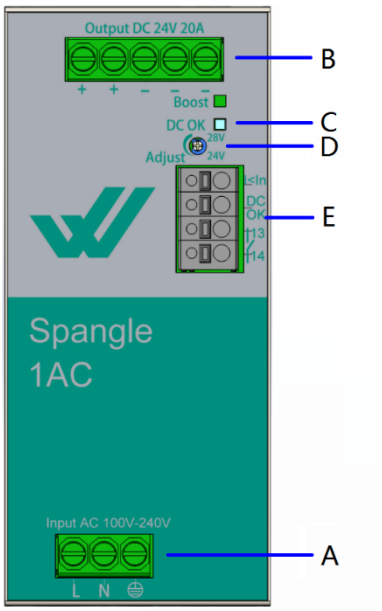

A: Input Terminals (screw terminals)
L, N Line input
⏚ PE (Protective Earth) input

B: Output Terminals (screw terminals, two pins per pole)
+ Positive output
– Negative (return) output

C: DC-OK LED (green), Boost LED (Yellow)
DC OK On, when the output voltage is >22V
Boost LED on, when output current > 1.05 In

D: Output voltage potentiometer
Guaranteed adjustment range: 24-28V
Factory set: 24V ± 1%

E: DC OK relay contact, DC OK and I<In signals
DC OK contact, Resistive load: 30VDC/1A Max
DC OK and I<In signals, logic High when true.

1. Input & Output Connector:	**Wire Connect (16~12AWG)**
Stripping Length	**6-7mm**
Torque	**0.5N.m**
2. Signal Connector	**Wire Connect (24~16AWG)**
Stripping Length	**7-8mm**
3. Output Voltage Adjustment:	**24Vdc~28Vdc**
4. DC OK LED:	**Green**

Current Rating for PVC Wire	
6 AWG	52.5 A
8 AWG	37.5 A
10 AWG	29.0 A
12 AWG	22.5 A
14 AWG	16.5 A
16 AWG	12.0 A
18 AWG	9.0 A
20 AWG	6.5 A
22 AWG	5.0 A
24 AWG	3.5 A
26 AWG	2.5 A
28 AWG	2.0 A
30 AWG	1.5 A

MECHANICAL SPECIFICATION

H x W x D: 124 x 55 x 127 mm (4.88 x 2.16 x 5.0 inch)

Unless otherwise specified tolerance of dimension is ± 0.5mm

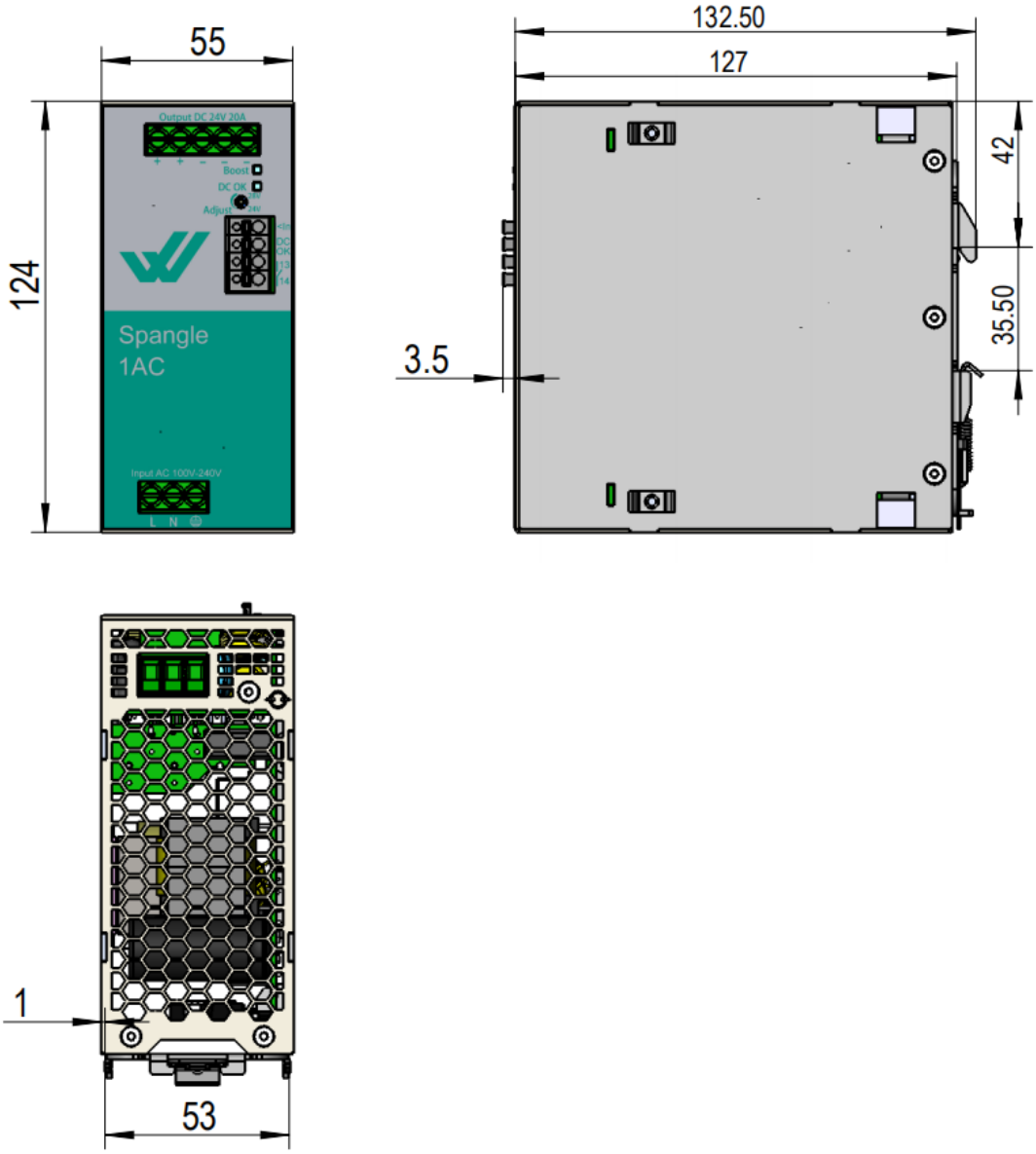

ASSEMBLY & INSTALLATION

The power supply unit (PSU) can be mounted on 35 mm DIN rails in accordance with EN 60715. The device should be installed with input terminal block at the bottom. Each device is delivered ready to install.

Mounting

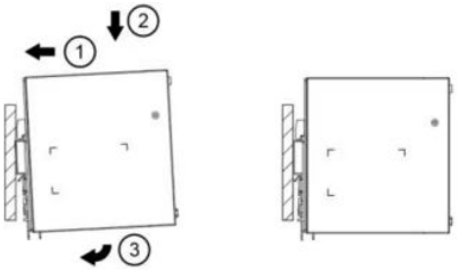

Snap on the DIN rail as shown in Fig.
1. Tilt the unit upwards and insert it onto the DIN rail.
2. Push downwards until stopped
3. Press against the bottom front side for locking
4. Shake the unit slightly to ensure that it is secured

Dismounting

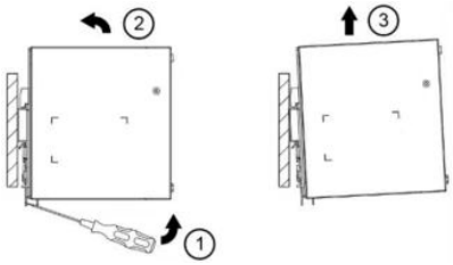

To uninstall as shown in Fig:
1. It provides an easy way to pull or slide down the latch with screwdriver as shown in Fig.
2. Then slide the PSU in the opposite direction.
3. Release the latch and pull out the PSU from the rail.

Safety instructions

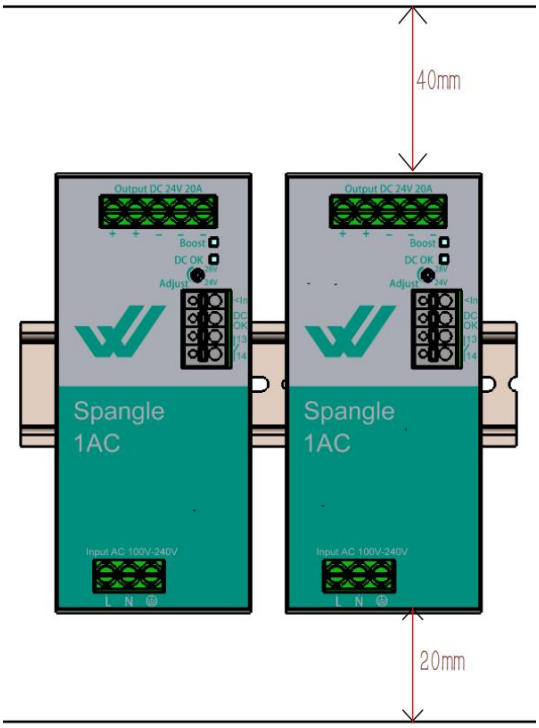

- ALWAYS switch mains of input power OFF before connecting and disconnecting the input voltage to the unit. If mains are not turned OFF, there is risk of explosion / severe damage.
- Installation direction: When installing, the port of the output end should be upward, and the port of the input end should be downward.

  Keep the following minimum installation clearances: 40mm on top, 20mm on the bottom, 5mm left and right side. Increase the 5mm to 15mm in case the adjacent device is a heat source. When the device is permanently loaded with less than 50%, the 5mm can be reduced to zero.
- Note that the enclosure of the device can become very hot depending on the surrounding air temperature and load of the power supply. Risk of burns!
- The main power must be turned off before connecting or disconnecting wires to the terminals.
- Hazardous voltages may be present for up to 5 minutes after the input mains voltage is disconnected. Do not touch the unit during this time.
- The power supplies are built in units and must be installed in a cabinet or room (condensation free environment and indoor location) that is relatively free of conductive contaminants.

Note: For different installation methods, attention should be paid to the device temperature rise, and derating should be applied according to the actual situation

CONNECTING WIRES TO SPRING CLAMP TERMINALS

Use a screwdriver with the correct blade width for wiring

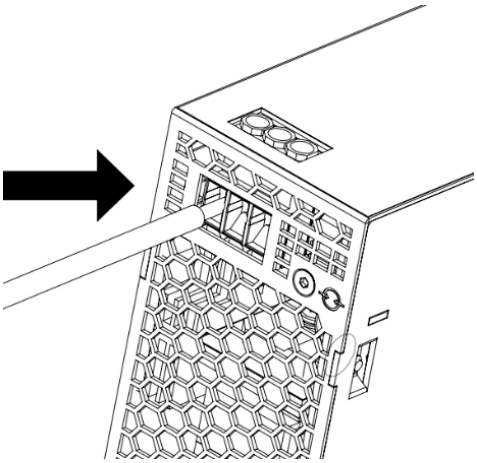

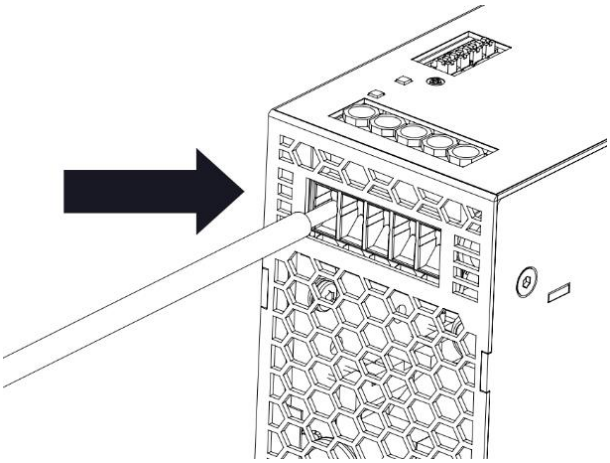

To disconnect the wires, reverse the procedure.

Flexible cables may require ferrules.

PRODUCT CHARACTERISTIC CURVE

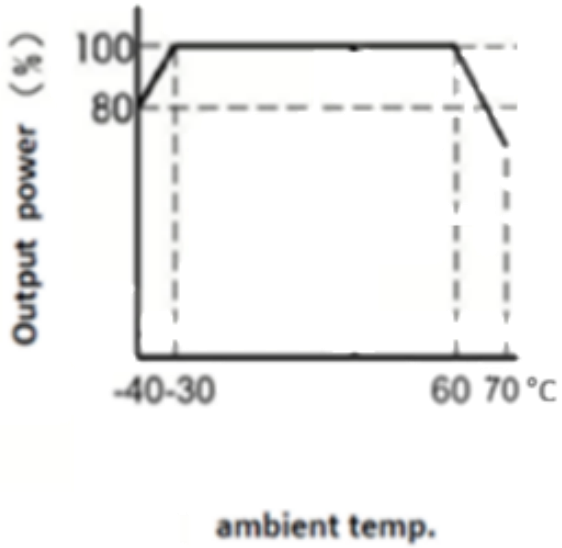

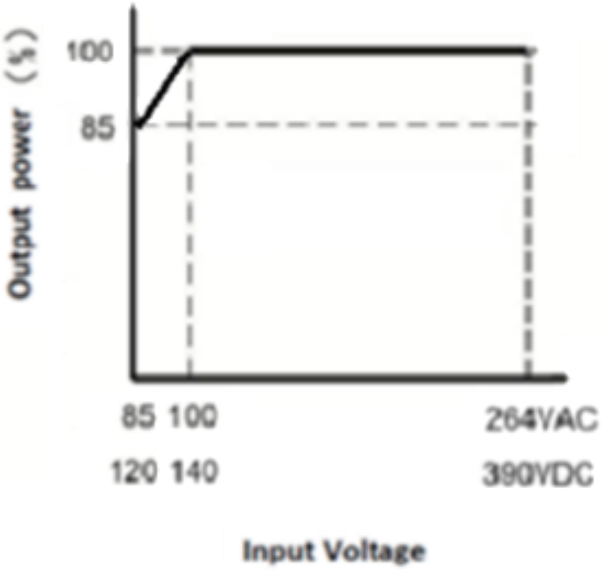

REGULATORY COMPLIANCE

EU Declaration of Conformity	CE	The CE mark indicates conformance with the - EMC directive - Low-voltage directive - RoHS directive
REACH Directive	REACH ✓	Manufacturer's Statement EU-Directive regarding the Registration, Evaluation, Authorization and Restriction of Chemicals
WEEE Directive		Manufacturer's Statement EU-Regulation on Waste Electrical and Electronic Equipment Registered in Germany as business to business (B2B) products.
RoHS (China RoHS 2)	25	Manufacturer's Statement Administrative Measures for the Restriction of the Use of Hazardous Substances in Electrical and Electronic Products 25 years